bauhaus

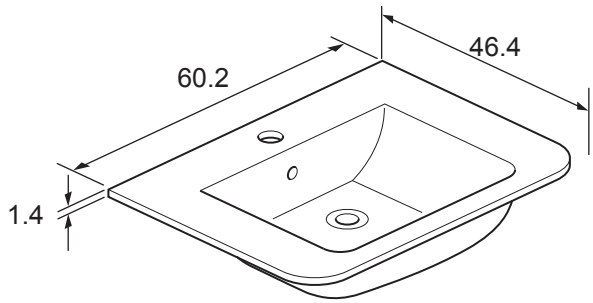

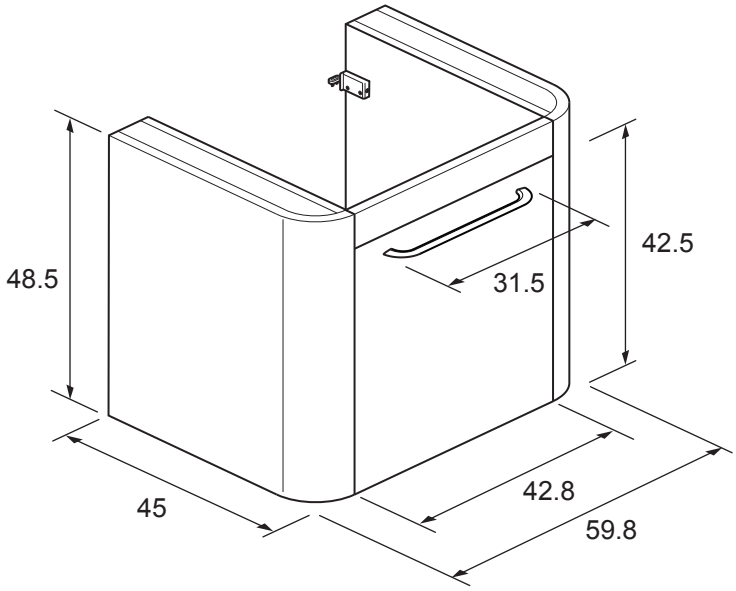

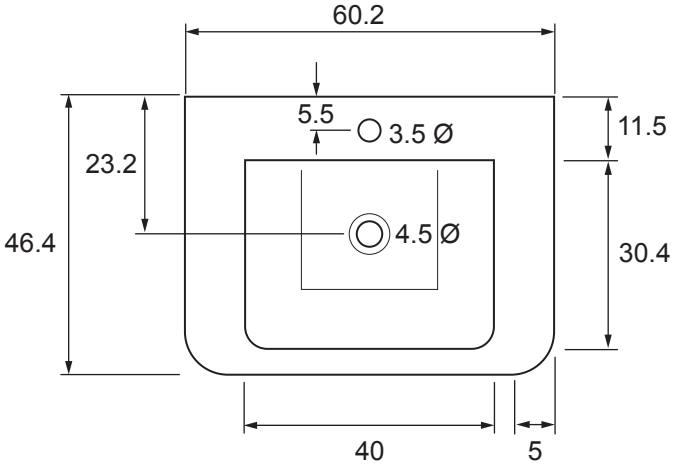

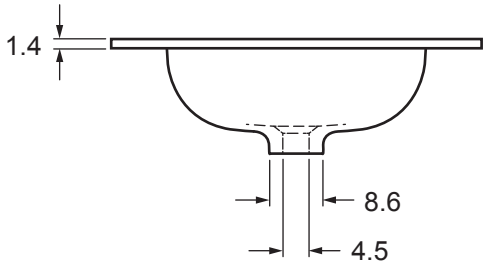

Dimensions in Centimeters

CELESTE 60cm BASIN - CL0611SRW
CELESTE 60cm BASIN UNIT CL6000D