bauhaus

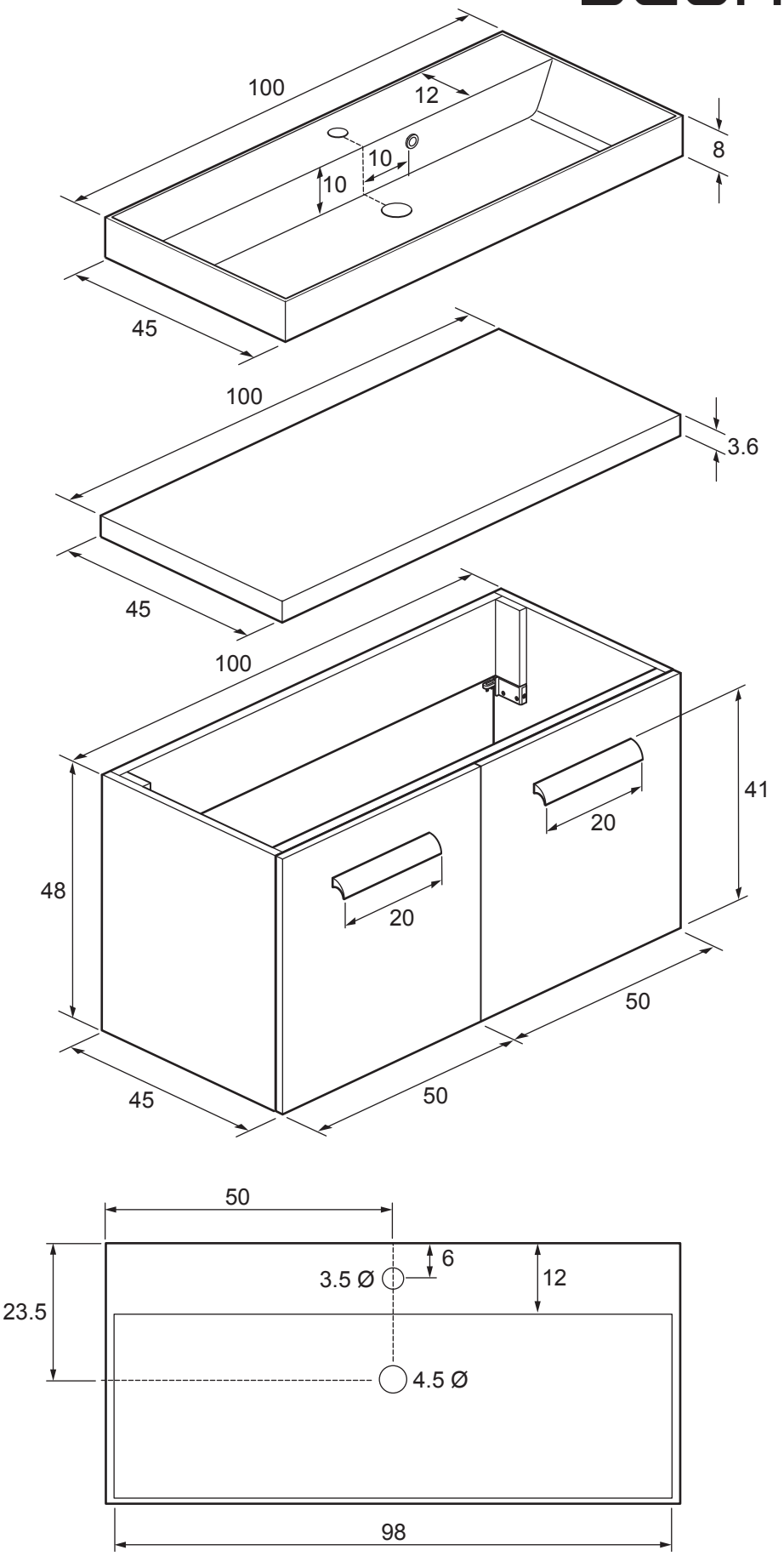

DESIGN 100cm BASIN - DE0004SRW
DESIGN 100cm WORKTOP BA1000
DESIGN 100cm BASIN UNIT - DE1000F

Dimensions in Centimeters