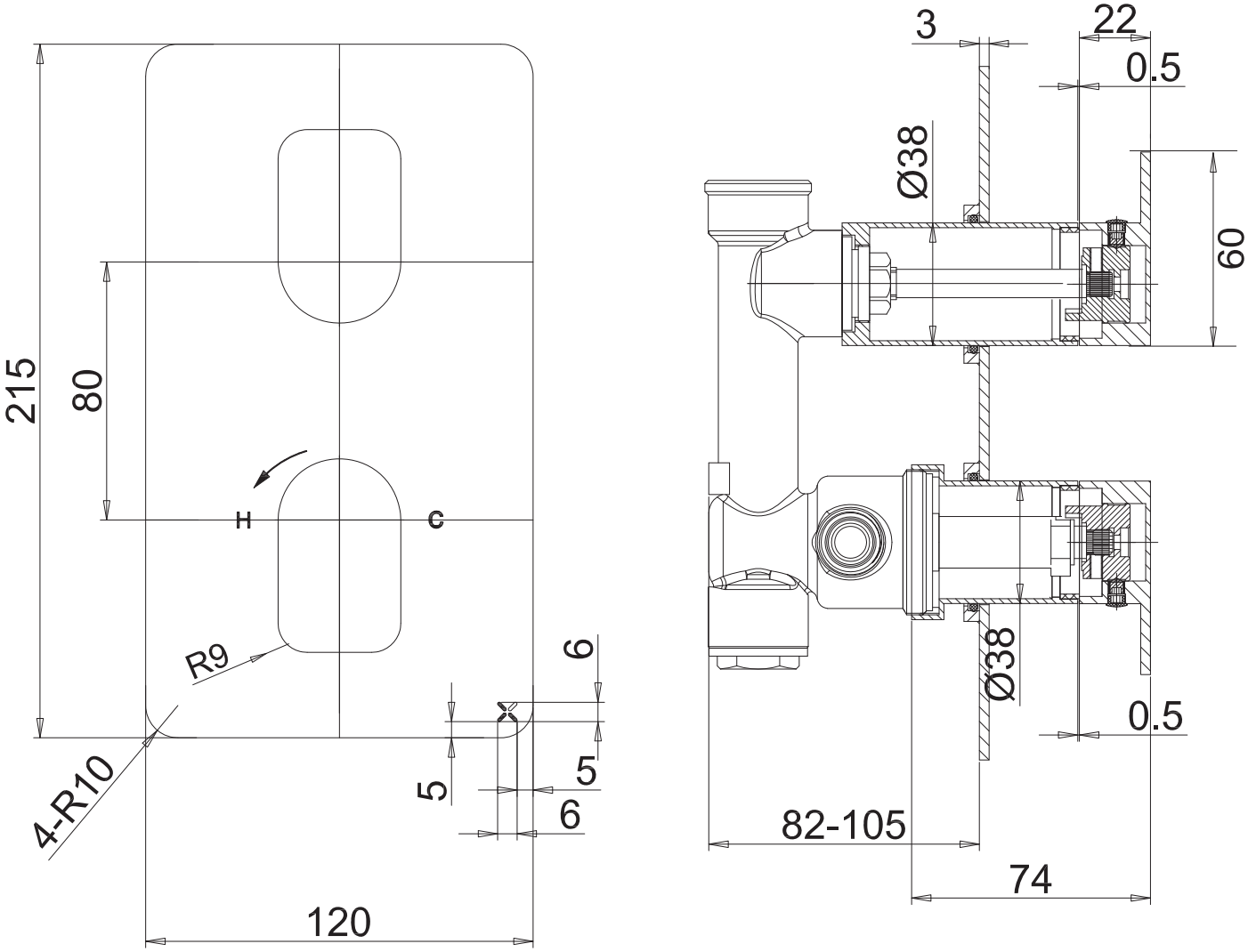
215
80
H
C
R9
4-R10
6
5
5
6
120
3
22
0.5
Ø38
60
Ø38
0.5
82-105
74