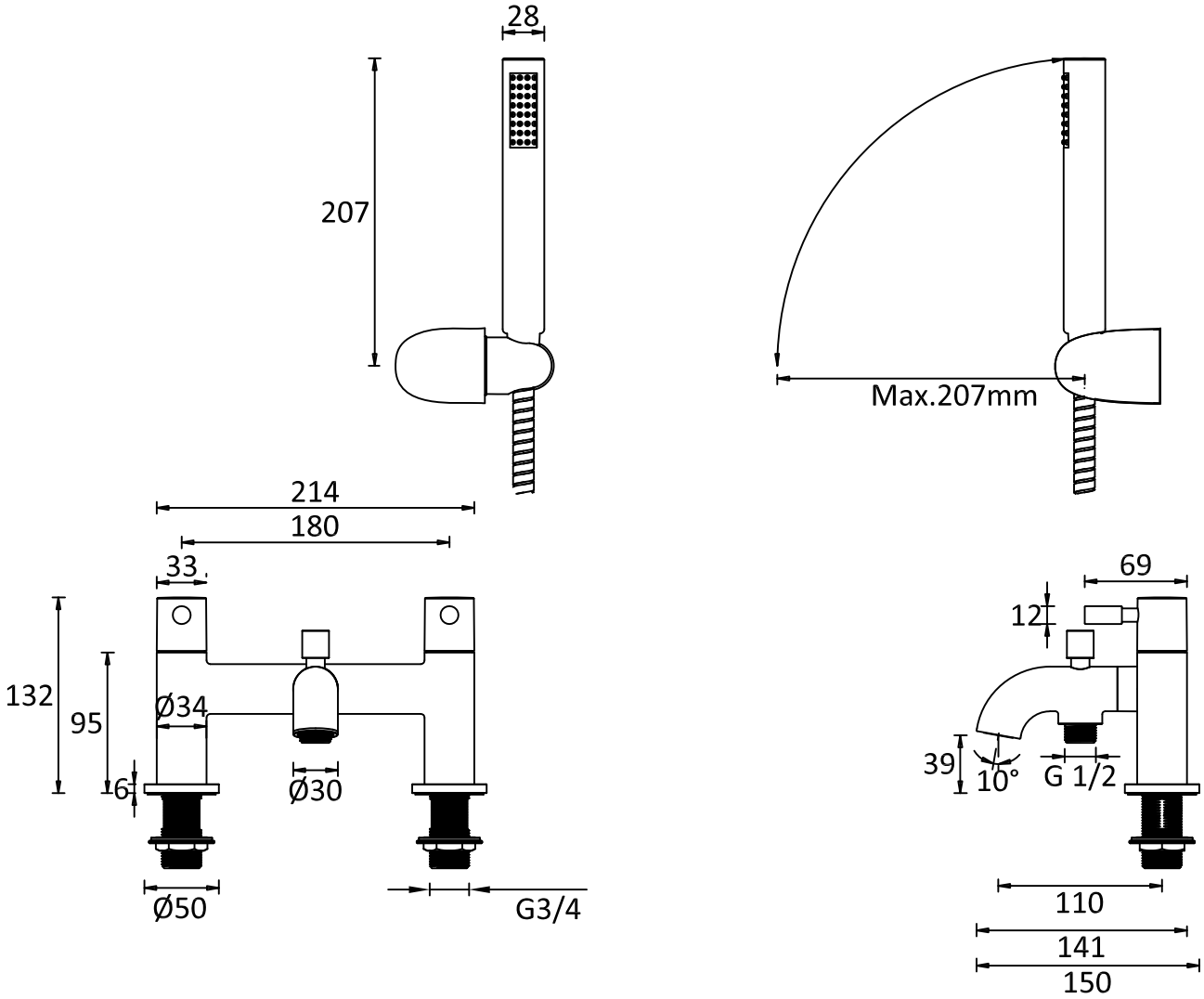
28
207
Max.207mm
214
180
33
132
95
Ø34
6
Ø30
Ø50
G3/4
69
12
39
10°
G 1/2
110
141
150

Hose:1500mm