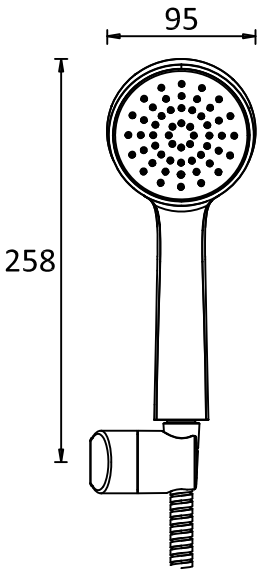
95
258

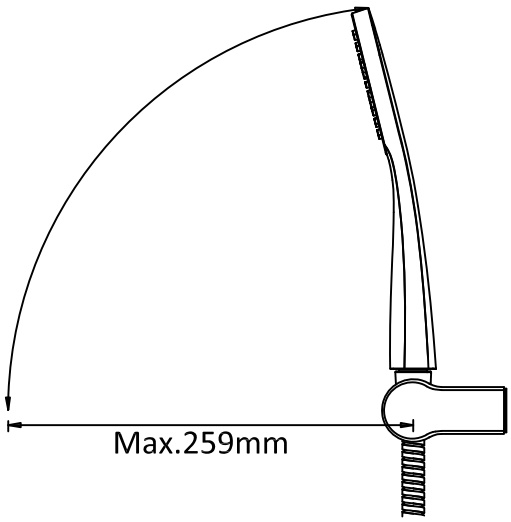
Max.259mm

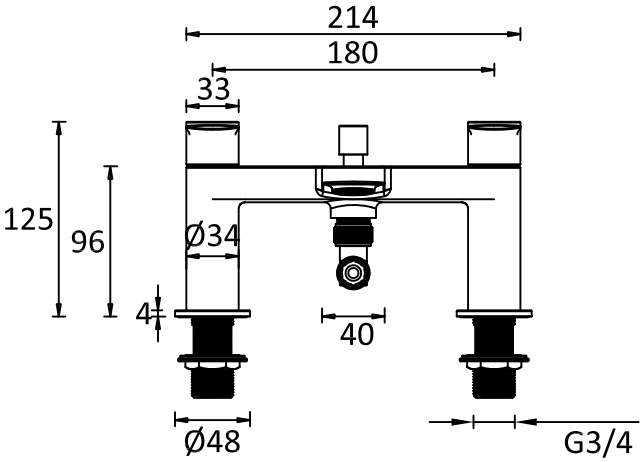
214
180
33
125
96
Ø34
4
40
Ø48
G3/4

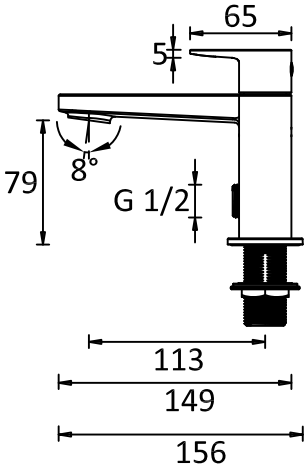
65
5
79
8°
G 1/2
113
149
156

Hose:1500mm