PRODUCT DATA SHEET



PRODUCT CODE

FH337V

RANGE

Fixed Head

DESCRIPTION

Revive Stainless Steel Shower Head Wall Mounted 300 x 300 Brushed Nickel

WEBSITE LINK Click Here

CATEGORY	Brassware
WARRANTY DETAILS	15 Years
COLOUR	Brushed Nickel
FINISH APPLICATION	PVD
PRIMARY MATERIAL	304 Stainless Steel
INSTALL TYPE	Wall Mounted
PRODUCT WIDTH MM	300
PRODUCT HEIGHT MM	169
PRODUCT LENGTH MM	346
PRODUCT NET WEIGHT KG	3.57
MINIMUM PRESSURE (BAR)	0.5
MAX WORKING PRESSURE (BAR)	5

NUMBER OF OUTLETS	1
NUMBER OF FUNCTIONS	1
INLET CONNECTIONS THREAD	G1/2”
WASTE INCLUDED	No
ANTI-SCALD PROTECTION	No
ENERGY SAVING	No

PRESSURE (BAR)	**0.2**	**0.5**	**1**	**2**	**3**	**4**	**5**
PRIMARY FLOWRATE		5.04	7.7	11.31	13.5	15.54	16.7
HANDSET FLOWRATE							
MASSAGE FLOW RATE							
AIR FLOW RATE							
WIRE FLOW RATE							
WATERFALL FLOW RATE							
MIST FLOW RATE							
HANDSPRAY FLOW RATE							

TECHNICAL DIMENSIONS

Dimensions in mm unless otherwise specified.

Tolerances (per material type) apply.

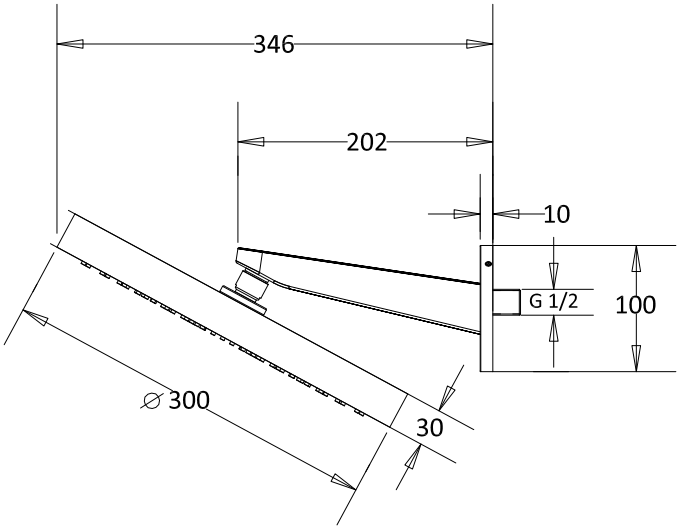

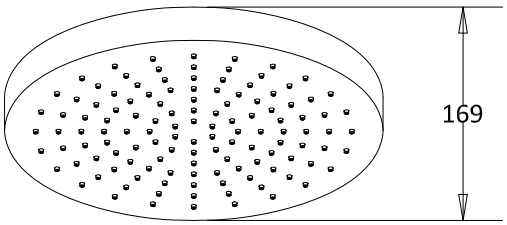

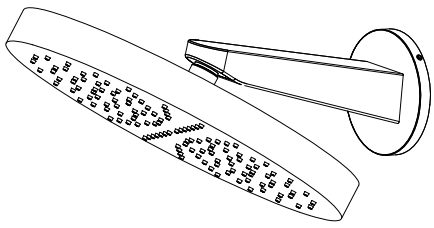

SPARES LIST

Only the parts labelled are available as spares.

NUMBER	PART CODE	DESCRIPTION
1	FH00001	Revive Showerheads Screws