PRODUCT DATA SHEET



PRODUCT CODE

MBFU20FH

RANGE

Fusion

DESCRIPTION

Fusion Round Fixed Head 200mm Chrome

WEBSITE LINK Click Here

CATEGORY	Brassware
WARRANTY DETAILS	15 Years
COLOUR	Chrome
FINISH APPLICATION	Electroplated
PRIMARY MATERIAL	Brass
INSTALL TYPE	Ceiling Mounted
PRODUCT WIDTH MM	207
PRODUCT HEIGHT MM	63
PRODUCT NET WEIGHT KG	0.35
MINIMUM PRESSURE (BAR)	0.5
MAX WORKING PRESSURE (BAR)	5

NUMBER OF OUTLETS	1
NUMBER OF FUNCTIONS	1
INLET CONNECTIONS THREAD	G1/2”
WASTE INCLUDED	No
ANTI-SCALD PROTECTION	No
ENERGY SAVING	No

PRESSURE (BAR)	**0.2**	**0.5**	**1**	**2**	**3**	**4**	**5**
PRIMARY FLOWRATE			11.6		16.5		20.5
HANDSET FLOWRATE							
MASSAGE FLOW RATE							
AIR FLOW RATE							
WIRE FLOW RATE							
WATERFALL FLOW RATE							
MIST FLOW RATE							
HANDSPRAY FLOW RATE							

Part of the
Bathroom Brands Group

TECHNICAL DIMENSIONS

Dimensions in mm unless otherwise specified.

Tolerances (per material type) apply.

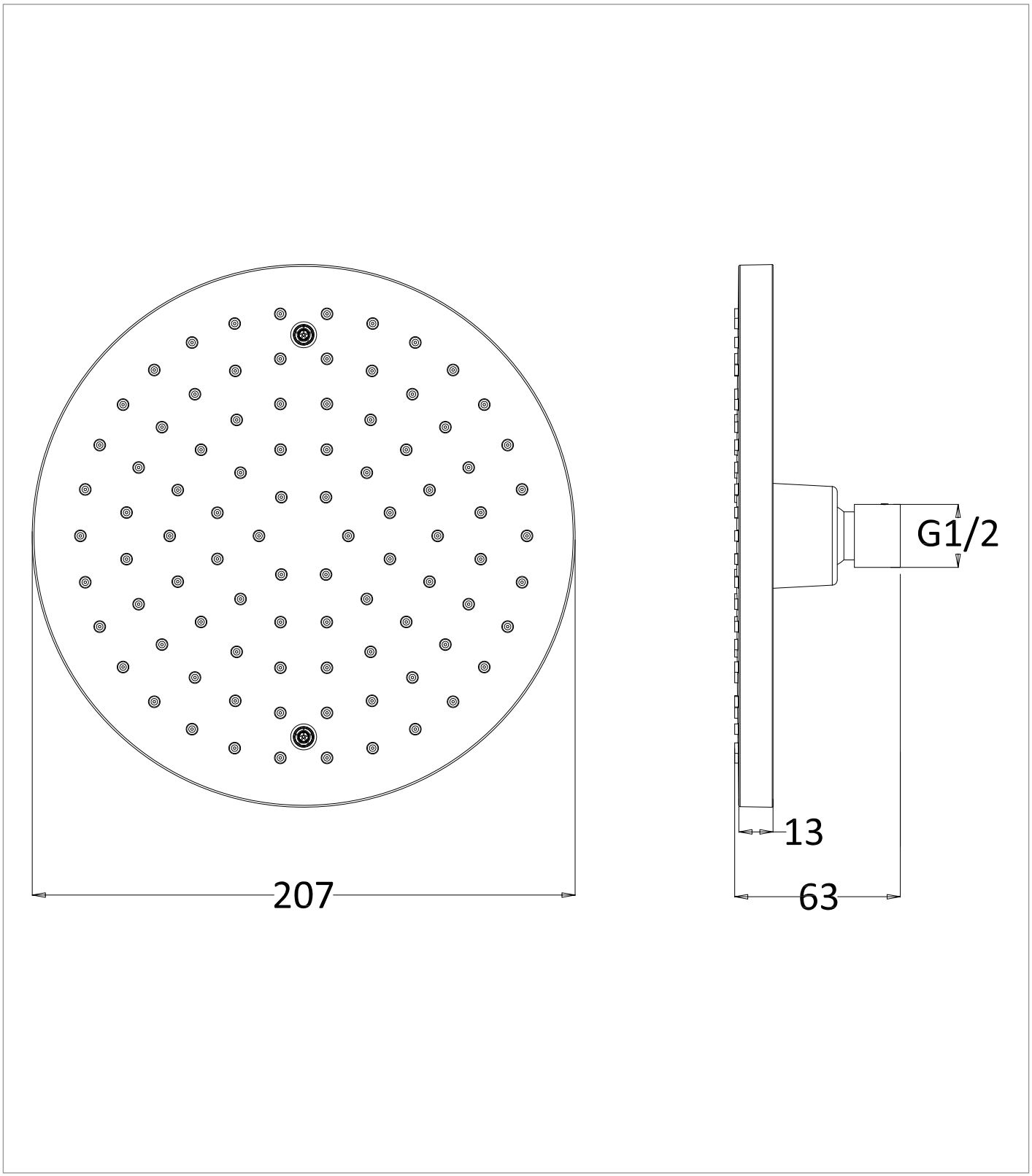

SPARES LIST

Only the parts labelled are available as spares.

NO SPARES AVAILABLE