PRODUCT DATA SHEET

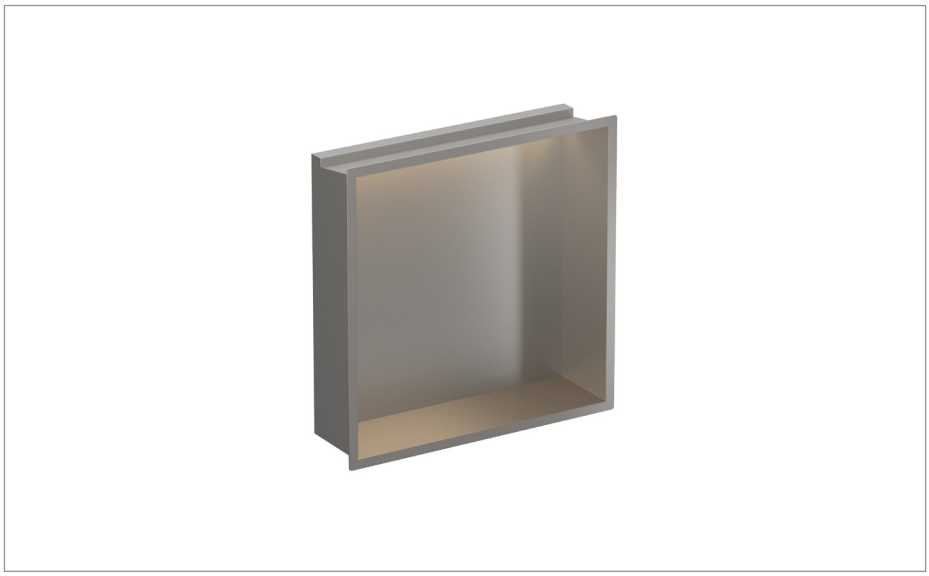

PRODUCT CODE

NI80305305LV

RANGE

Niche

DESCRIPTION

Niches 305 x 305mm x 80mm with LED Light Strip Brushed Nickel

WEBSITE LINK Click Here

CATEGORY	Accessories
WARRANTY DETAILS	15 Years
COLOUR	Brushed Nickel
FINISH APPLICATION	PVD
PRIMARY MATERIAL	304 Stainless Steel
INSTALL TYPE	Wall Mounted
PRODUCT WIDTH MM	305
PRODUCT HEIGHT MM	305
PRODUCT DEPTH MM	80
PRODUCT NET WEIGHT KG	1.9

TECHNICAL DIMENSIONS

Dimensions in mm unless otherwise specified.

Tolerances (per material type) apply.

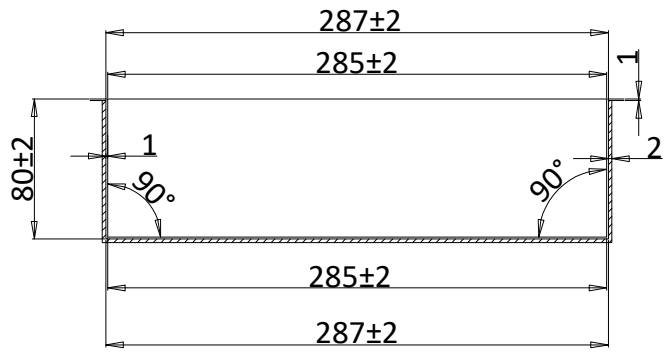

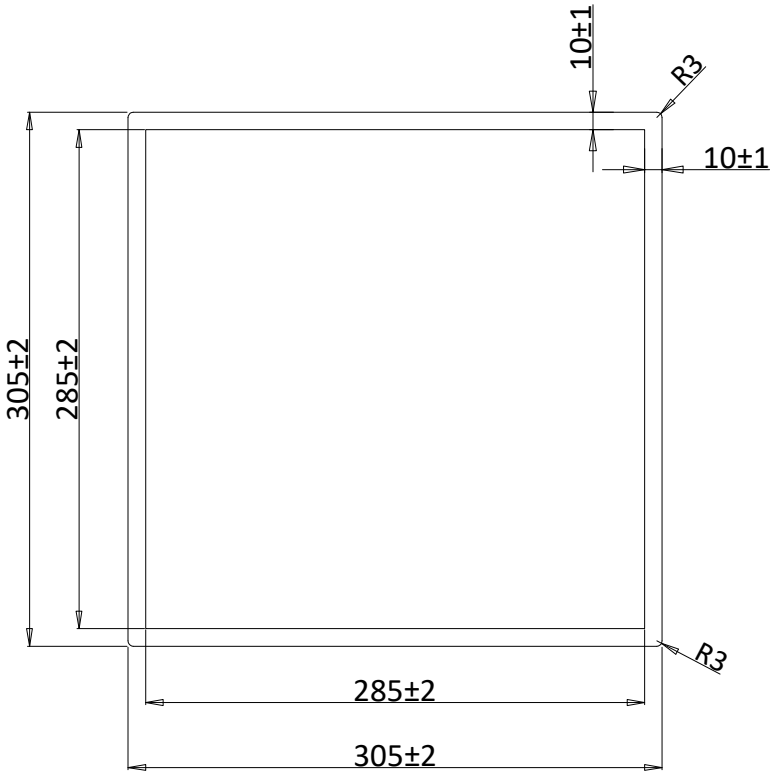

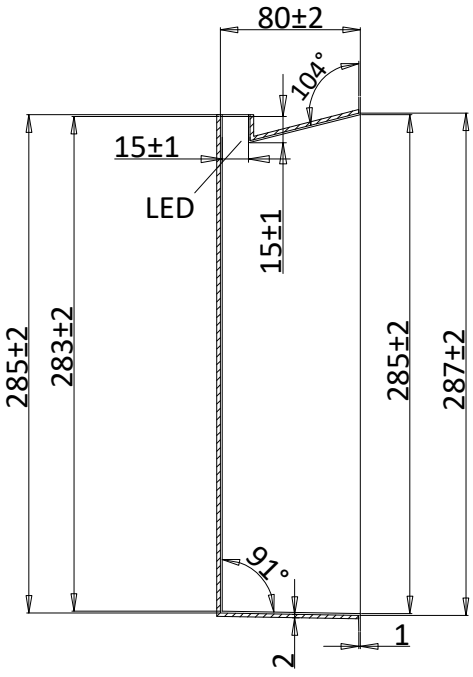

SPARES LIST

Only the parts labelled are available as spares.

NUMBER	PART CODE	DESCRIPTION
1	NI00001	LED driver for niches LPV-20-12
2	NI00610	LED Light strip with tube 610mm
3	NI00305	LED Light strip with tube 305mm