PRODUCT DATA SHEET



PRODUCT CODE

PRO110DNBZ_K

RANGE

MPRO Knurled

DESCRIPTION

MPRO Knurled Basin Monobloc
Brushed Bronze

WEBSITE LINK Click Here

CATEGORY	Brassware
WARRANTY DETAILS	15 Years
COLOUR	Brushed Bronze
FINISH APPLICATION	PVD
PRIMARY MATERIAL	Brass
INSTALL TYPE	Deck Mounted
PRODUCT WIDTH MM	46
PRODUCT HEIGHT MM	166
PRODUCT LENGTH MM	151
PRODUCT NET WEIGHT KG	0.9
MINIMUM PRESSURE (BAR)	1
MAX WORKING PRESSURE (BAR)	5

APPROVAL	2401903
NUMBER OF OUTLETS	1
NUMBER OF FUNCTIONS	1
SPOUT PROJECTION	115
SWIVEL SPOUT	No
FLOW REGULATOR	Neoperl Aerator
WASTE INCLUDED	No

PRESSURE (BAR)	**0.2**	**0.5**	**1**	**2**	**3**	**4**	**5**
PRIMARY FLOWRATE		2.89	3.87	5.07	4.69	4.47	4.58
HANDSET FLOWRATE							
MASSAGE FLOW RATE							
AIR FLOW RATE							
WIRE FLOW RATE							
WATERFALL FLOW RATE							
MIST FLOW RATE							
HANDSPRAY FLOW RATE							

Part of the
Bathroom Brands Group

TECHNICAL DIMENSIONS

Dimensions in mm unless otherwise specified.

Tolerances (per material type) apply.

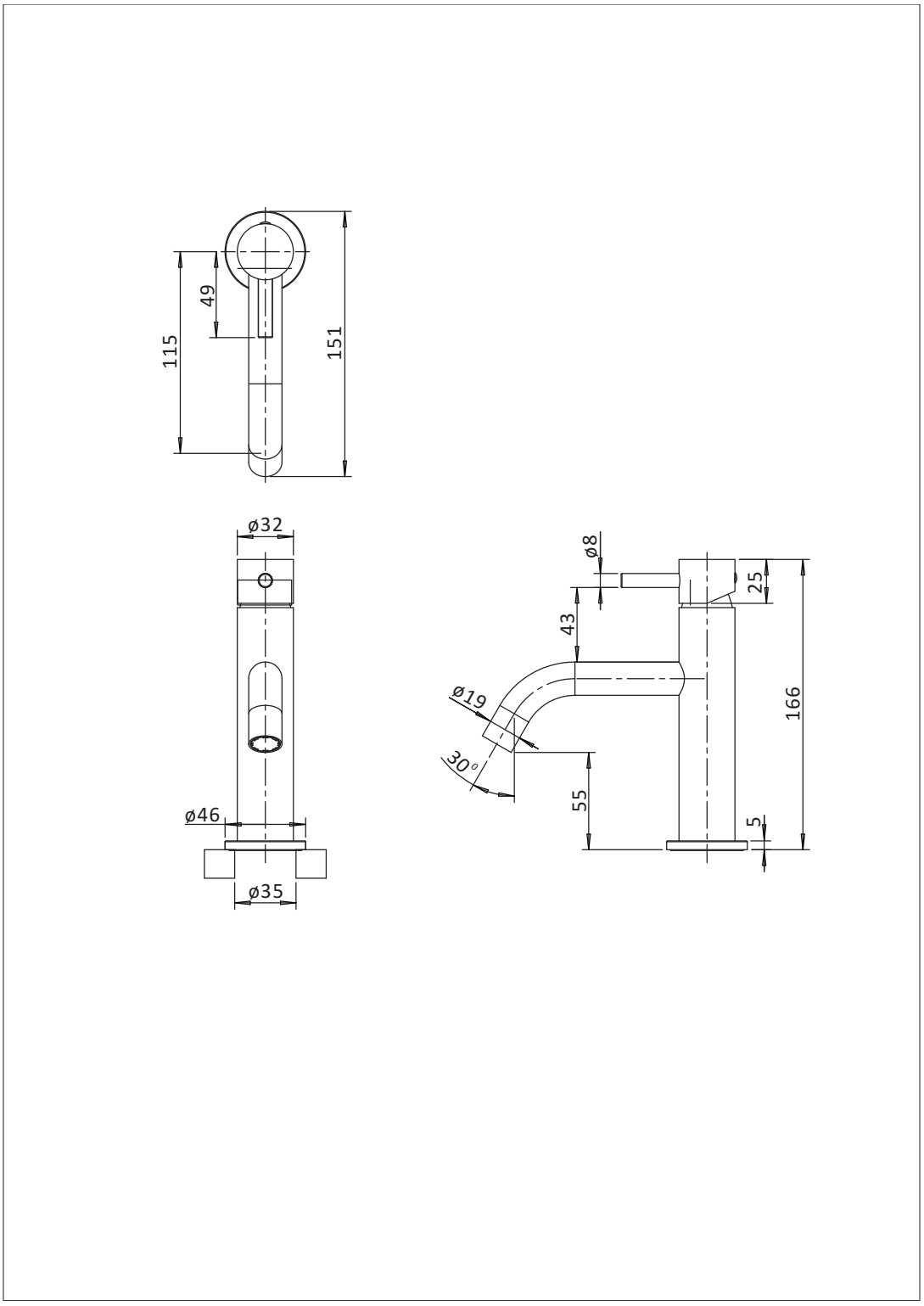

SPARES LIST

Only the parts labelled are available as spares.

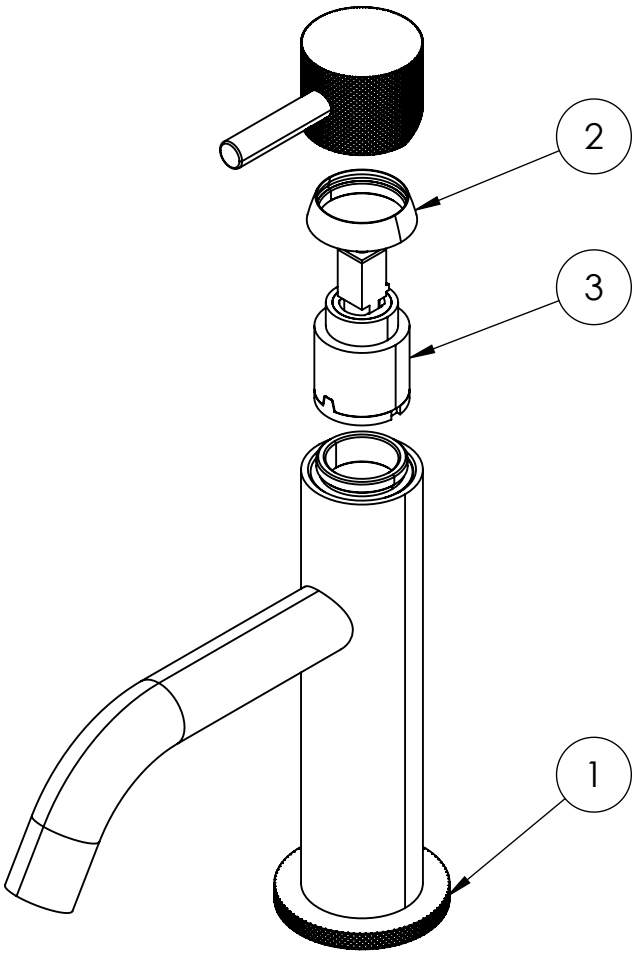

NUMBER	PART CODE	DESCRIPTION
1	PROBASERING1T	PRO110/112 Base Ring Slate
	PROBASERING1BZ	PRO110 112 Base Ring Brushed Bronze
2	PROCARTLOCK2T	PRO110/112 Cartridge lock nut & cover Slate
	PROCARTLOCK2BZ	PRO110/112 Cartridge lock nut & cover Brushed Bronze
3	CGPRO114M	W-X1A126N Mixer Cartridge for PRO110/114
	CGPRO114M	W-X1A126N Mixer Cartridge for PRO110/114