PRODUCT DATA SHEET



PRODUCT CODE
TRL002F

RANGE
Tranquil

DESCRIPTION
Tranquil Wall Light Brushed Brass

WEBSITE LINK Click Here

CATEGORY	Lighting
WARRANTY DETAILS	5 Years
COLOUR	Brushed Brass
FINISH APPLICATION	Electroplated
PRIMARY MATERIAL	Steel
SECONDARY MATERIAL	Glass
INSTALL TYPE	Wall Mounted
PRODUCT WIDTH MM	188
PRODUCT HEIGHT MM	188
PRODUCT DEPTH MM	99
PRODUCT NET WEIGHT KG	1

STANDARDS	BS EN 60598
IP RATING	IP44
CABLE LENGTH (MM)	203
COLOUR RANGE (K)	3000k
LUMINOUS EFFICACY (LM/W)	100lm/W
COLOUR RENDERING INDEX (RA)	80
ENERGY RATING	F
SWITCH TYPE	Mains Wired
DIMMABLE	Yes
LIGHT TYPE	G9
LED WATTAGE	3W
IP RATING HEATING	IP44

TECHNICAL DIMENSIONS

Dimensions in mm unless otherwise specified.

Tolerances (per material type) apply.

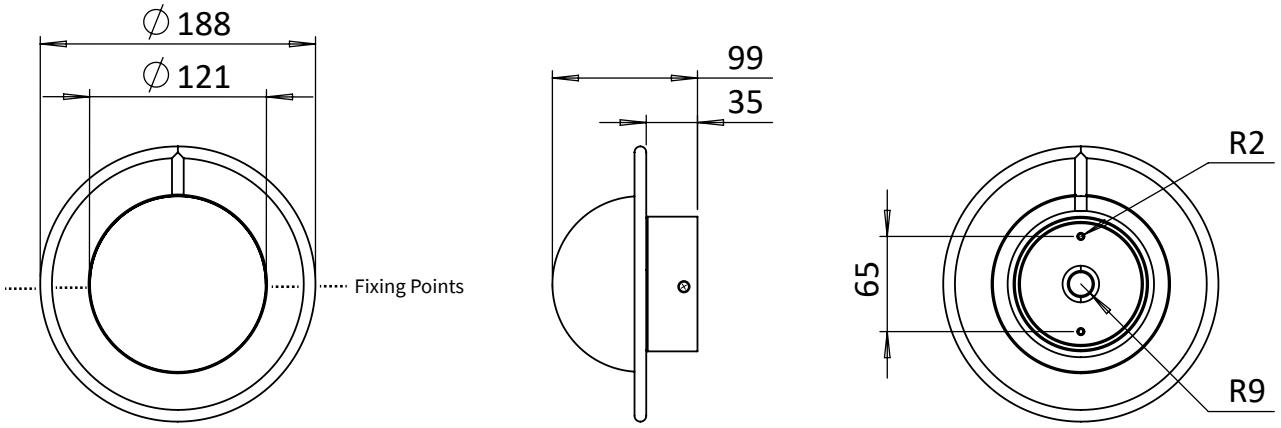

SPARES LIST

Only the parts labelled are available as spares.

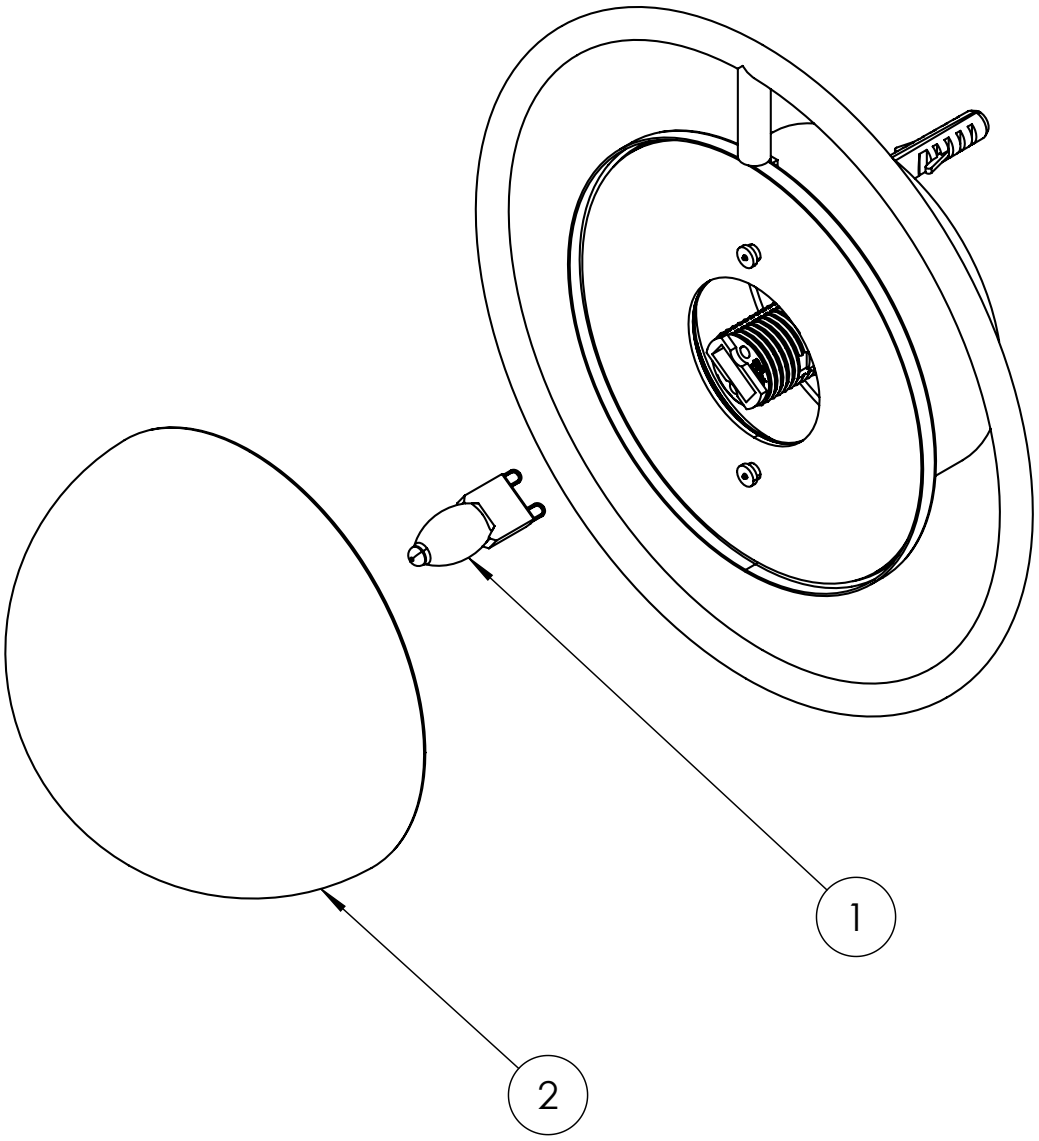

NUMBER	PART CODE	DESCRIPTION
1	G9BULB_TRANQUIL	G9 LED Bulb for TRL002 & TRL003
2	GLASS_TRL002	Frosted Glass Shade for TRL002