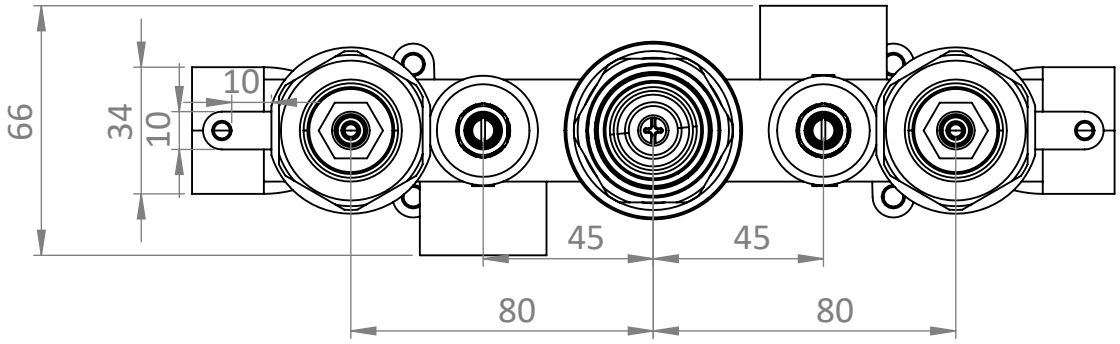
66
34
10
10
45
45
80
80

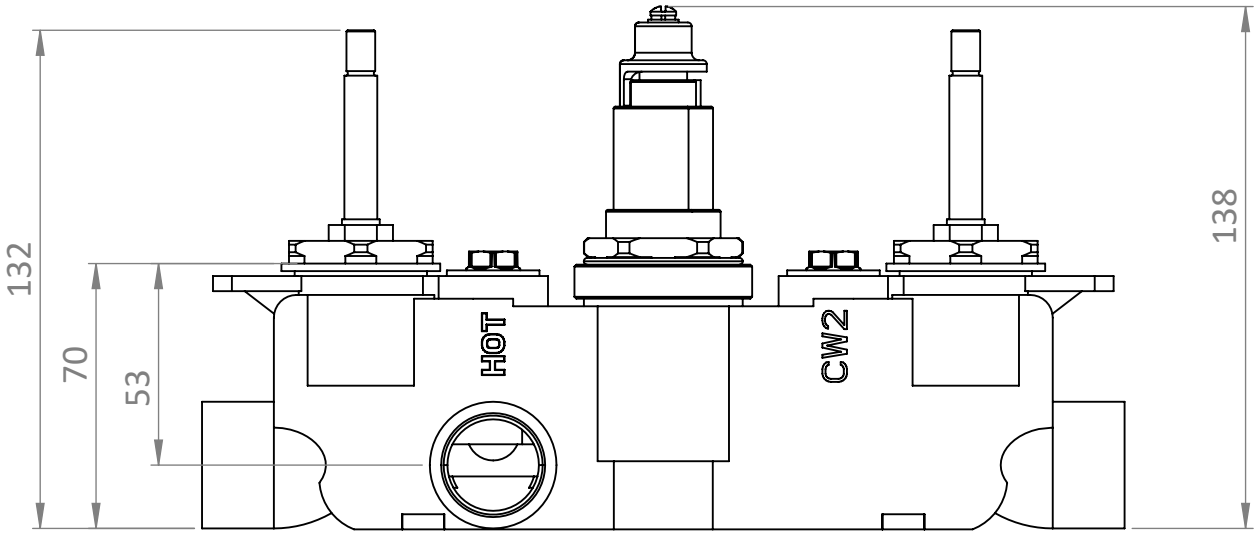
132
70
53
138
HOT
CW2