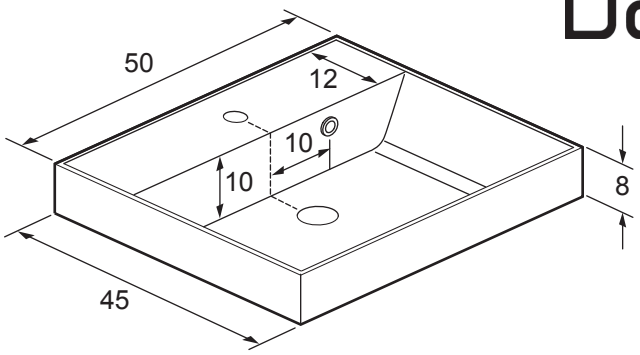

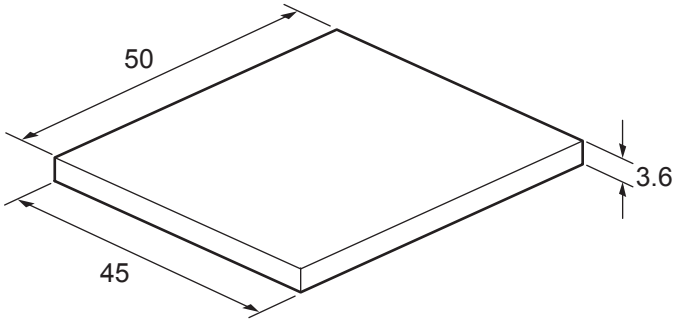

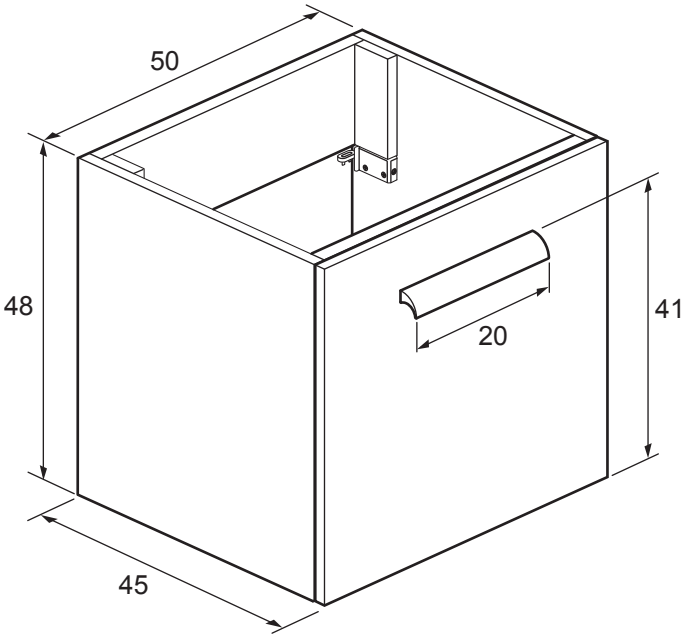

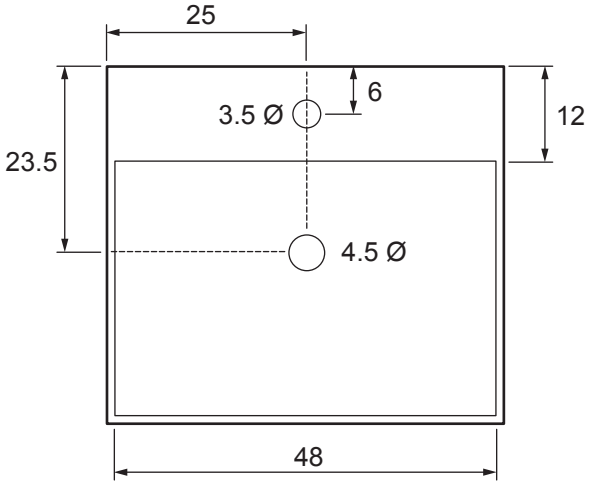

DESIGN 50cm BASIN - DE0002SRW
DESIGN 50cm WORKTOP BA5000
DESIGN 50cm BASIN UNIT - DE5000F

Dimensions in Centimeters