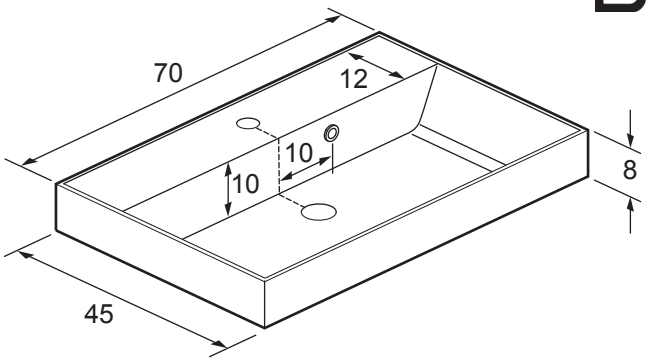

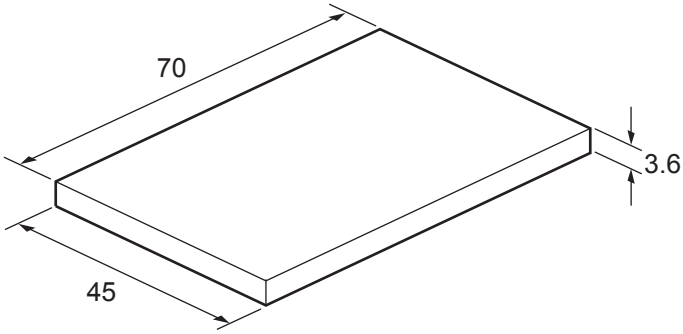

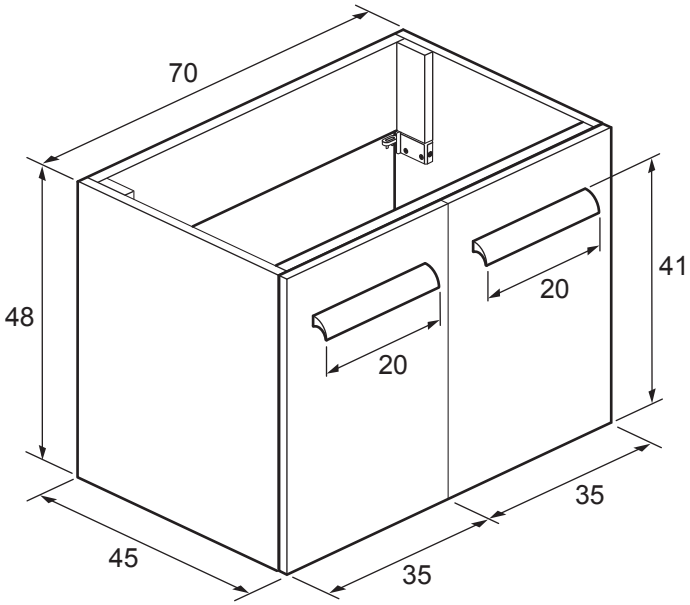

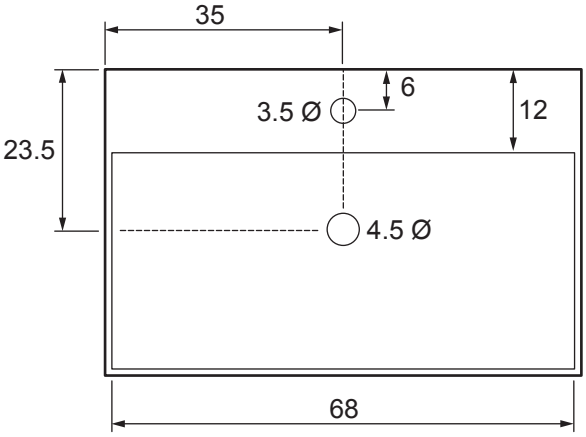

DESIGN 70cm BASIN - DE0003SRW
DESIGN 70cm WORKTOP BA7000
DESIGN 70cm BASIN UNIT - DE7000F

Dimensions in Centimeters