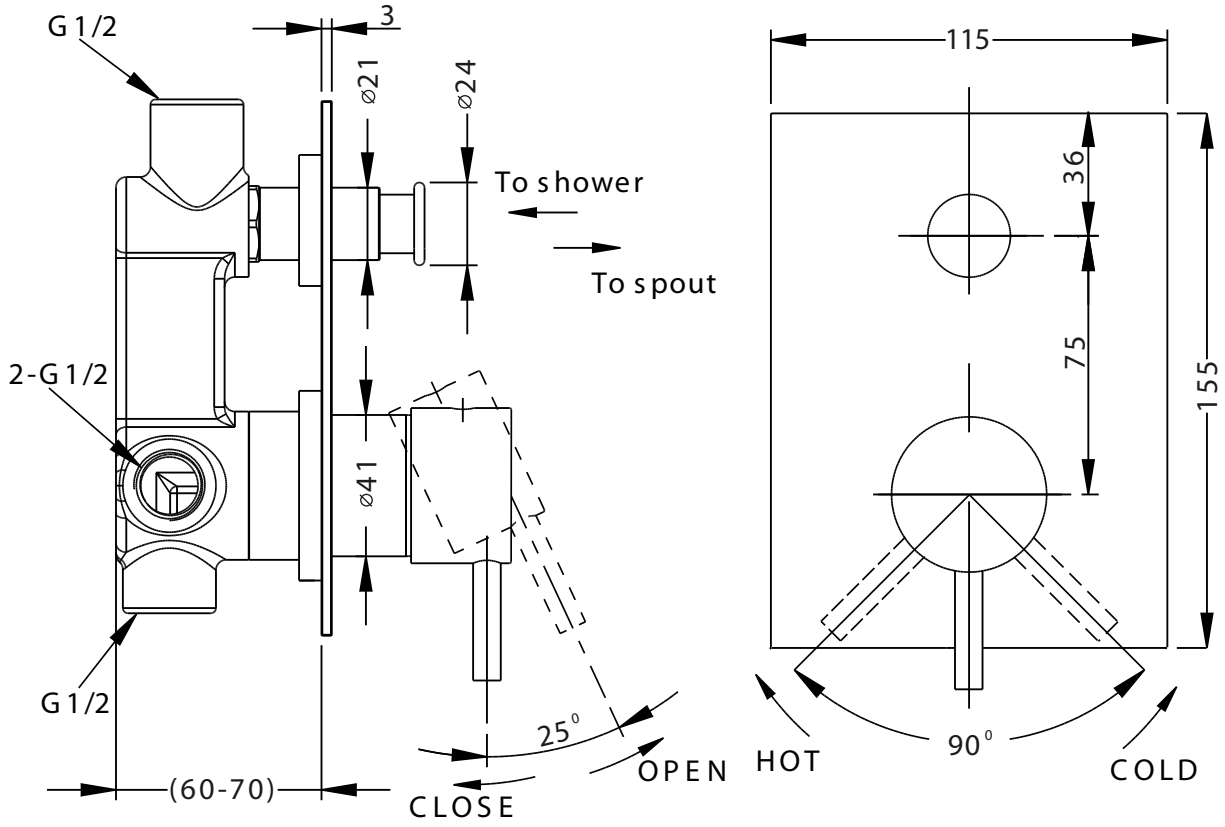

KL0005RC - KAI LEVER MANUAL SHOWER VALVE WITH DIVERTER Recessed