Measurements in millimetres mm

Information updated August 2016

Tel 0345 873 8840

crosswater™

TECHNICAL

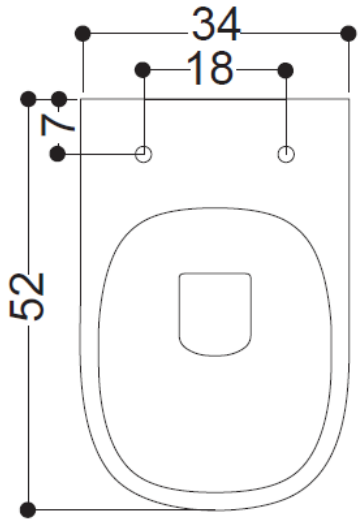

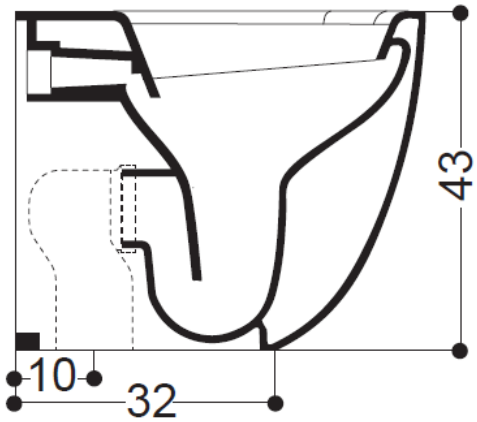

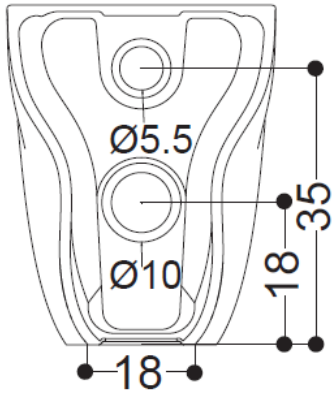

bauhaus™

WILD BACK TO WALL WC—BOX RIM

FLOOR STANDING

WI6007CW