crosswater

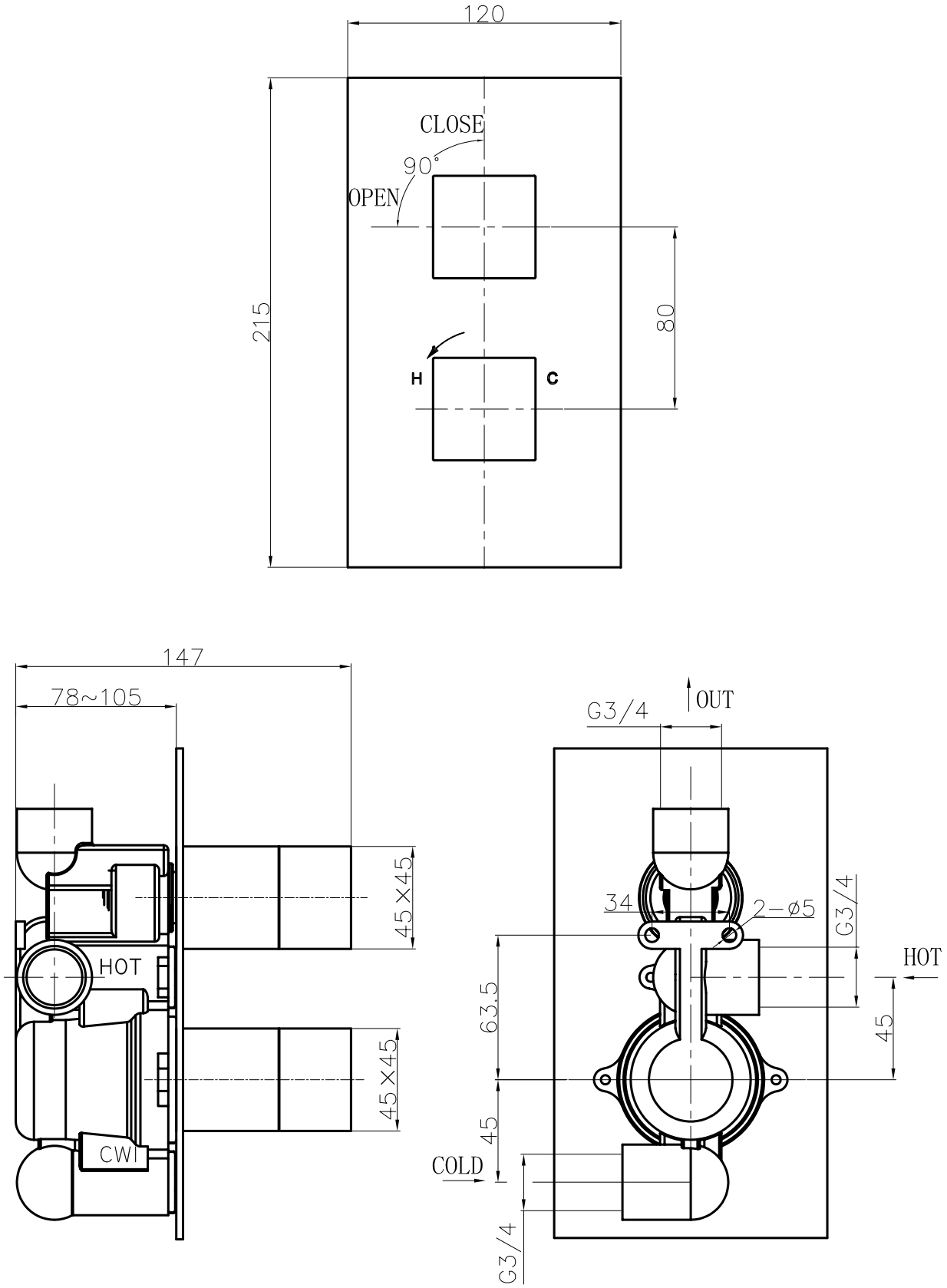

WS1000RC - WATERSQUARE THERMOSTATIC SHOWER VALVE Recessed